Minoston®

Wi-Fi Smart Dimmer Switch

• MS10W •



- Switch x1
- wiring x1
- screws x2
- Faceplate x1

Specifications:

Power: 120VAC, 60Hz
Wireless Frequency: 2.4GHz
Wireless Standard: IEEE802.11b/g/n
Maximum Load:
500 W incandescent, 150W LED
(300W with both sides of heat sink tabs off)
Minimum Load: 5W for LED bulbs
For indoor use.

FCC
This device complies with part 15 of the FCC and Industry Canada license-exempt RSS standard(s). Operation is subjected to the following two conditions:
(1) this device may not cause harmful interference, and (2) this device must accept any interference received, including interference that may cause undesired operation.
FCC NOTE: The manufacturer is not responsible for any radio or TV interference caused by unauthorized modifications to this equipment. Such modifications could void the user's authority to operate the equipment.
— Reorient or relocate the receiving antenna.
— Increase the separation between the equipment and receiver.
— Connect the equipment into an outlet on a circuit different from that to which the receiver is connected.
— Consult the dealer or an experienced radio/TV technician for help.
NOTE: This equipment has been tested and found to comply with the limits for a Class B digital device, pursuant to Part 15 of the FCC Rules. These limits are designed to provide reasonable protection against harmful interference in a residential installation. This equipment generates, uses and can radiate radio frequency energy and, if not installed and used in accordance with the instructions may cause harmful interference to radio communications. However, there is no guarantee that interference will not occur in a particular installation. If this equipment does cause harmful interference to radio or television reception, which can be determined by turning the equipment off and on, the user is encouraged to try to correct the interference by one or more of the following measures:
Important note: To comply with the FCC RF exposure compliance requirements, no change to the antenna or the device is permitted. Any change to the antenna or the device could result in the device exceeding the RF exposure requirements and void user's authority to operate the device.

⚠ CAUTION - PLEASE READ!

This device (MS10W) is intended for installation in accordance with the National Electric Code and local regulations in the United States, or the Canadian Electrical Code and local regulations in Canada. If you are unsure or uncomfortable about performing this installation consult a qualified electrician.

⚠ WARNING - SHOCK HAZARD

TURN OFF THE POWER to the circuit for the switch and lighting fixture at the service panel (circuit breaker) prior to installation.
ALL WIRING CONNECTIONS MUST BE MADE WITH THE POWER OFF to avoid personal injury and/or damage to the switch.

⚠ OTHER WARNINGS

Risk of Fire
Risk of Electrical Shock
Risk of Burns

⚠ WARRANTY

Our Products warrants this product to be free from manufacturing defects for a period of one year from the original date of consumer purchase. This warranty is limited to the repair or replacement of this product only and does not extend to consequential or incidental damage to other products that may be used with this product. This warranty is in lieu of all other warranties, expressed or implied. Some states do not allow limitations on how long an implied warranty lasts or permit the exclusion or limitation of incidental or consequential damage, so the above limitations may not apply to you. This warranty gives you specific rights, and you may also have other rights which vary from state to state.

Part 1. Installation

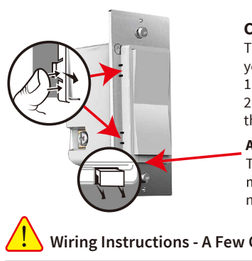

CHANGING THE COLOR OF THE PADDLE(OPTIONAL)
This step is optional. Before you start you may want to change the color of the paddle to match your wallplate or decor.
1. Push side tabs in on one side and then the other to release paddle. Lift the cover up and off.
2. Simply put the new paddle onto the switch by side tabs and snap securely into place.Once this step has been completed please proceed to part 2 wiring.

Air-Gap Switch:
The "air gap switch" will cut power to the device if it's pulled up. It's located right below the main switch itself, often next to the LED. Pull up for Bulb replacement, push down for normal use.

Scan to view installation guide

⚠ Wiring Instructions - A Few Quick Reminders

Please do not try installing this device if you are unsure of how electrical circuits operate. Cause it can be dangerous and even life-threatening if you do not install this correctly. Please consult a qualified electrician if necessary. With that said, here are a few other warnings we'd like to point out for your safety:
Note before installation
1. The Wi-Fi In-wall Smart Switch must not exceed **150W LED, 500W incandescent**.
2. The switch is designed only for use with **permanently** installed fixtures.
3. The wall box required: 1-gang U.S. wall box. **3½ in deep** recommended, **2¼ in deep** minimum.
4. Work with **regular 3-way on/off** for 2 locations control. It can only be connected with regular 3-way on/off switch, **don't use a smart switch or a dimmer switch! Couldn't work with an add-on switch!**
5. The colors of your wires may not match the ones in our diagrams so please make sure you've **identified all wires correctly** based on their source, not color only.
6. This switch **requires a Neutral for installation**, or the installation will not succeed.
7. Not recommended for fan.

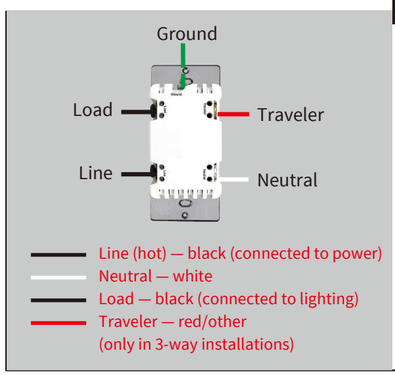

HOW TO INSTALL THE WIRES

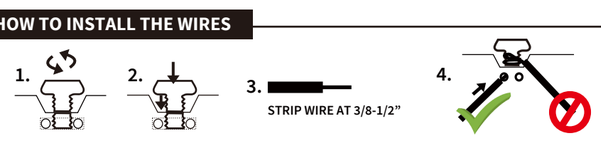

1. Unscrew: carefully turn the screw counterclockwise to leave enough space for the wire to be inserted. Do not unscrew the screws completely.
2. Press down: Once loosened, use your finger so it catches the thread.
3. Insert the wire: make sure the wire is completely straight, then insert it into the terminal while holding down the screw. Do not wrap the wire around the screw!
4. Tighten: Turn the screw clockwise to tighten the wire. Make sure the wires are locked!
Note: There are 2 holes for each terminal can be used in the connection.You can use a jump wire or the second hole at the terminal to connect.



• *Please contact us at* **ask@minoston.com** *if you have any questions during installation.*

1. **Tool:** Please prepare a flat head screwdriver.
2. **Turn power OFF at circuit breaker or fuse box.**
3. **Remove wallplate.**
4. **Remove the switch mounting screws.**
5. **Disconnect the wires and label them after remove the old switch.**(Please use our sticker)

Line | Load | Neutral | Ground | Traveler(Just for 3-way switch)

6. **Carefully remove the switch from the switch box.** (DO NOT disconnect the wires.)
7. **There are up to five screw terminals on the smart switch, these are marked** (Please check **<HOW TO INSTALL THE WIRES>**)
8. **Fix the wallplate with screws after wiring succeed.** (Please use our screws.)
9. **The Ground was excluded from the diagram to simplify the illustration.** Please Make sure all ground wires are connected to all switches respectively.

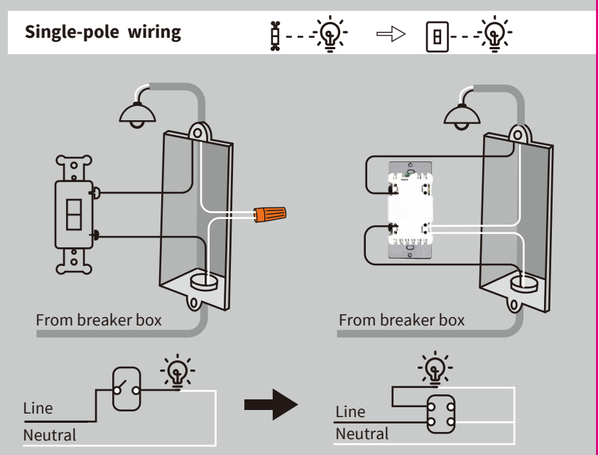

Please check which option is best for your 3-way installation.

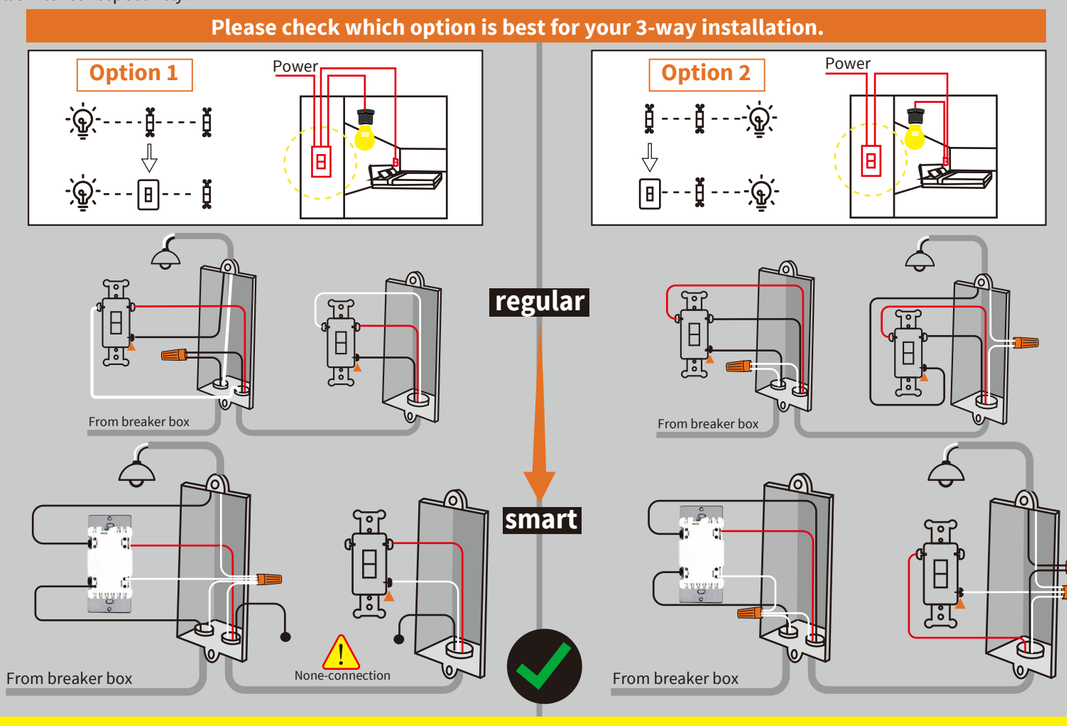

1) **Neutral required**. If the switch box do not have a Neutral, please stop! Connect the **white wire to neutral terminal** (use a white jump wire form the package or the second hole at the terminal to connect.)
2) Insert the Line wire to Line terminal and Load wire to Load terminal. **LOAD and LINE Can't be swapped**, please make sure to identify them correctly!
3) Install the smart switch in the switch box which directly connects to the power **Line, Load and Neutral.**
4) Only work with **regular 3-way on/off** for 2 locations control. It can only be connected with regular 3-way on/off switch, **don't use a smart switch or a dimmer switch! Couldn't work with an add-on switch!**

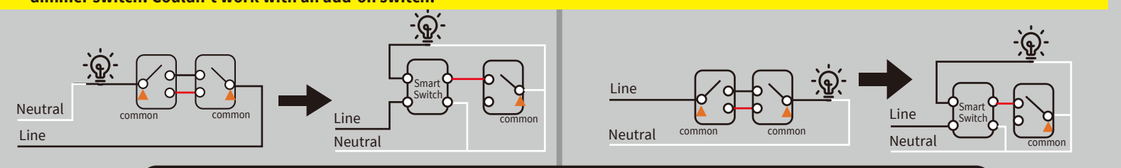

⚠ Please change the wiring of the regular switch to make the 3-way configure works properly.

When the smart switch does not work properly, there may be in error conditions:

1) Make sure the Neutral wire of the smart switch is correctly connected.
2) The wiring of this regular switch has not changed.

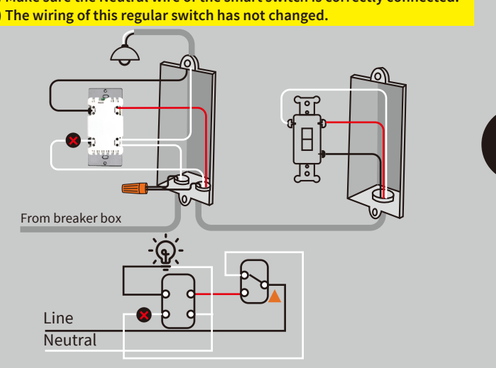

The wiring of this regular switch has not changed.

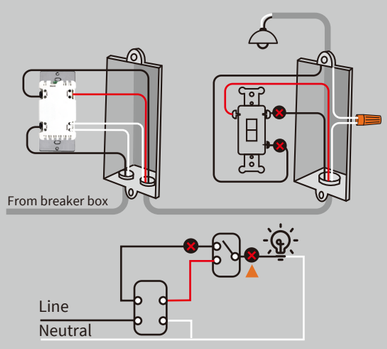

Part 2. Manual Control



LED Indicator:
- Red: Network failure
- Blue: Network configuration mode
- Orange: Light status indicator
- Purple: AP Network configuration mode

OPERATION GUIDE

• **Adding your device to Wi-Fi network:**
Please make sure the switch is on the "OFF" position.
Hold the "down" button more than 10s until the bulb flashes and ●blue LED indicator blinks rapidly to initiate App-configured Mode.

• **If you need to reset the device (Factory setting)**
Network reset
1.Turn off the light(when the light is on)
2.Hold the "down" button more than 10s until the bulb flashes (●blue LED indicator blinks rapidly)

Operation	LED	Switch
Press "down "	ON (Default)	Power OFF
Press "up"	OFF (Default)	Power ON
Hold	/	Dimmer up or dimmer down
Hold the "down" button more than 10s	● blue LED flashes	Connect to the network
Press the "down" button 5 times qucikly	flash 3 times	Change LED status
Press the "up" button 5 times quickly	flash 3 times	Restores status after power failure
Press the "up" button 8 times quickly	flash 3 times	Output off State Setting
Press "down " button 8 times quickly	flash 3 times	Button Function Setting

Part 3. APP Connection

QR code **Smart Life**

1. Please scan the QR code to download the application "**Smart Life**".
2. If you cannot download the Smart Life app, please search "**Smart Life**" on Google Play (for Android phone) or Apple Store (for iOS phone) to download.
After you download the Smart Life App and register a new account, please follow the instructions below to set up your smart switch.
3. The smart switch can be also used with **Amazon Echo** and **Google Home**. Please scan the QR code below and follow the instructions if you have any trouble pairing with them.

Amazon-Echo **Google-Home**

Note:
1)Our products only support 2.4GHz Wi-Fi network.
2) 3 connection network modes: Bluetooth quick-fit Mode, Easy Mode, AP Mode. Choose the most suitable mode to configure the network.
3)Please operate quickly when ● blue LED indicator blinks rapidly.
4) When indicator flash enters the network, complete standard operation within 30s
5) ●Purple LED Flashing slowly enters AP Mode (select "AP Mode" follow the below instructions.)
6) Make sure the switch works properly by manual control before network configuration.
• **Device Reset /** Network reset
step 1: turn off the light (when the light is on)
step 2: hold the "Down" button until the light bulb flashes (●LED blinks rapidly)

• *Please contact us at* **ask@minoston.com** *if you have any questions during installation.*

Bluetooth Quick-Fit Mode

1 Turn on your Phone bluetooth.

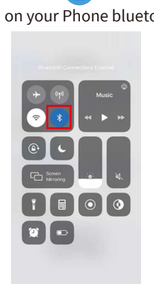

2 The auto-connection comes with ● ***blue LED indicator blinks for 3 minutes*** to wait for configuration. If it stopped, please Hold the "down" button more than 10s until the bulb flashes and the blue LED blinks again.

3 Tap '+' to add this switch in the **"Smart Life"** APP.

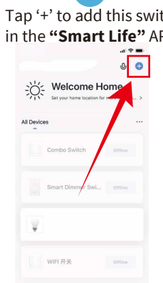

4 You'll see "Devices to be added"---"Go to add".

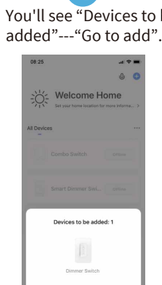

5 Click to "Add "



6 Enter Wi-Fi Password

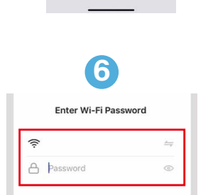

7 Adding device...



8

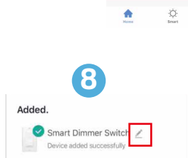

6: Enter the Wi-Fi Password (Your phone should have connected to the same Wi-Fi first).
7: Wait for the app to connect to your Wi-Fi until it's 100%. (LED stays in ● green 3 secotnds.)
8: Edit the name of your new smart plug!

Note: When the Bluetooth is off, APP will remind: "You are advised to enable Bluetooth".

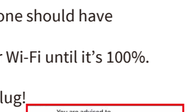

Easy Mode

1 Tap '+' to add a device in your app

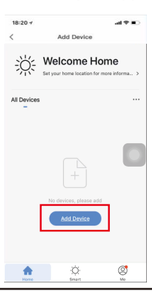

2 Select "Lighting "- "Lighting (Wi-Fi)"



3 Enter the Wi-Fi Password

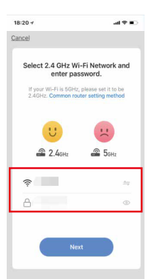

Hold the "down" button more than 10s until the light bulb flashes and **"BLUE"** LED blinks rapidly.
Please make sure the switch is on the "OFF" position.



5 Click to "Continue "



6 Select "is fast blinking(0.5s/time)"



7 Wait for it's 100% (LED stays in● green 3 seconds.)

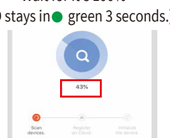

8 Click and edit the name of switch!

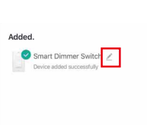

AP Mode

⚠ If you cannot successfully configure the default mode, try connecting to AP mode.
1) Click on "AP Mode" in the upper right corner.
2) When the ● blue LED indicator flashes quickly, press and hold the off button (default is the down button) for more than 5s until the bulb flashes twice to enter the AP mode, and the ●purple LED indicator flashes quickly.
3) Click "Confirm light flashes."
4) Enter Wi-Fi network password.
5) Open wireless WLAN settings with "SmartLife-xxxx".
6) Back in the application, continue adding devices and wait for the connection to complete.

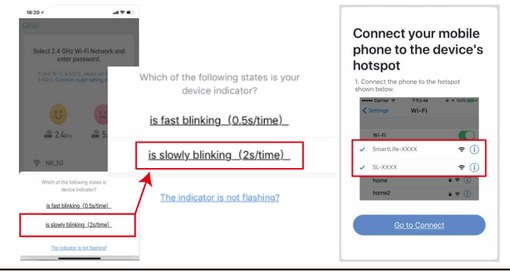

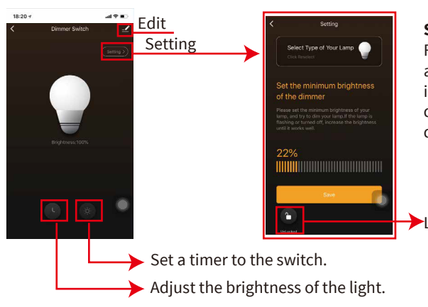

SETTING
For better performance of the LED, please set a minimum brightness value. When the bulb is at this minimum brightness value, the bulb does not flicker. The minimum brightness of different bulbs may be different.

The indicator will flashes 3 times after each parameter set successfully		
Parameter 1: **LED Indicator Status Setting**- This parameter can access you to choose the led indicator to be on when the switch(light) is on/off, or LED indicator remains on/off all times.	Value=1 (default) Orange LED is On when the switch(light) Off and Orange LED is Off when the switch (light) On. Value=2 Orange LED is On when switch(light) On and Orange LED is Off when the switch(light) Off. Value=3 Orange LED is always Off. Value=4 Orange LED is always On.	**Quick press "Down" button 5 times.** Please note: the switching of each value is in order, a quick press "Down" button 5 times will switch once. eg: Switching from value1 to value 4 needs 3 switchings.
Parameter 2: **Restores State after Power Failure** This parameter can access you to set the switch to be on/off after power failure.	Value=1 The switch is off regardless of the state prior to power failure. Value=2 The switch is on regardless of the state prior to power failure. Value=3 (default) memory state before power failure This switch will be return to state prior to the power failure after power is restored.	**Quickly press "Up" button 5 times.** Please note: the switching of each value is in order, a quick press "Up" button 5 times will switch once. eg: Switching from value1 to value 3 needs 2 switchings.
Parameter 3: **Light off State Setting** This parameter can access you to set the light fade out or off immeditaly.	Value=1 (default) Fade out Value=2 Instantaneous off	**Quick press "Up" button 8 times** Please note: the switching of each value is in order, a quick press "Up" button 8 times will switch once. eg: Switching from value1 to value 2 needs 1 switching.
Parameter 4: **Button Function Setting** This parameter can access you to set the up button to turn the light on/off.	Value=1 (default) The up button turn the light on and down button turn lights off. Value=2 The up button turn the light off and down button turn lights on.	**Quick press "Down" button 8 times** Please note: the switching of each value is in order, a quick press "Down" button 8 times will switch once. eg: Switching from value1 to value 2 needs 1 switching.

Part 4. Troubleshooting

Possible Problem	Possible Cause	Solution
• Unable to connect with the phone	Network issue.	Please check if the red LED blinks. If yes, retry to add this switch to your network.
• The light bulb blinks when the switch turn it off	There is a leakage of electricity or the bulb does not close with the switch	Rewire the switch or replace the bulb.
• Cannot turn the switch on/off manually	1. Incorrect wiring 2. No electricity 3. The bulb is broken or incompatible	• Make sure the switch wiring is correct • Inspecting circuit breakers; Make sure the power supply is restored • change a light bulb
• The switch is not work with APP control	1. Network delay or disconnect 2. The phone refuses your permission 3. The switch out of the order	• Check your network connectivity, The switch needs to be reconnected • Grant permission on your phone settings • Manually switch on to check the switch
• The switch cannot connected to the application	1. Enter wrong Wi-Fi password 2. Weak Wi-Fi signal 3. Unable to connect to Wi-Fi	• Enter the correct Wi-Fi password • Check Wi-Fi signal • Confirm Your Wi-Fi is 2.4GHz

Please contact us at **ask@minoston.com** *if you have any questions during installation.*

V3.0